SERVICE ITEM MENU

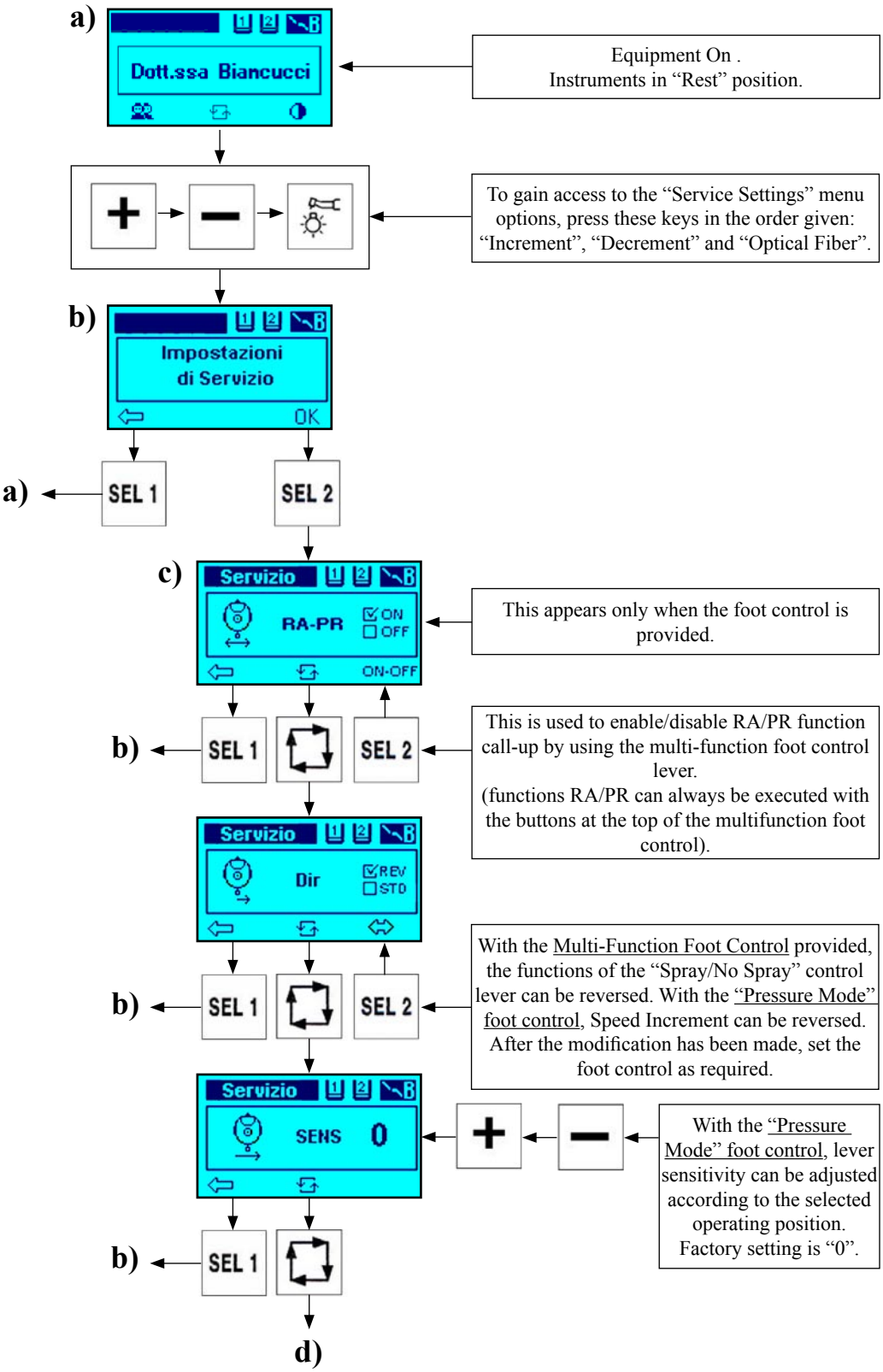

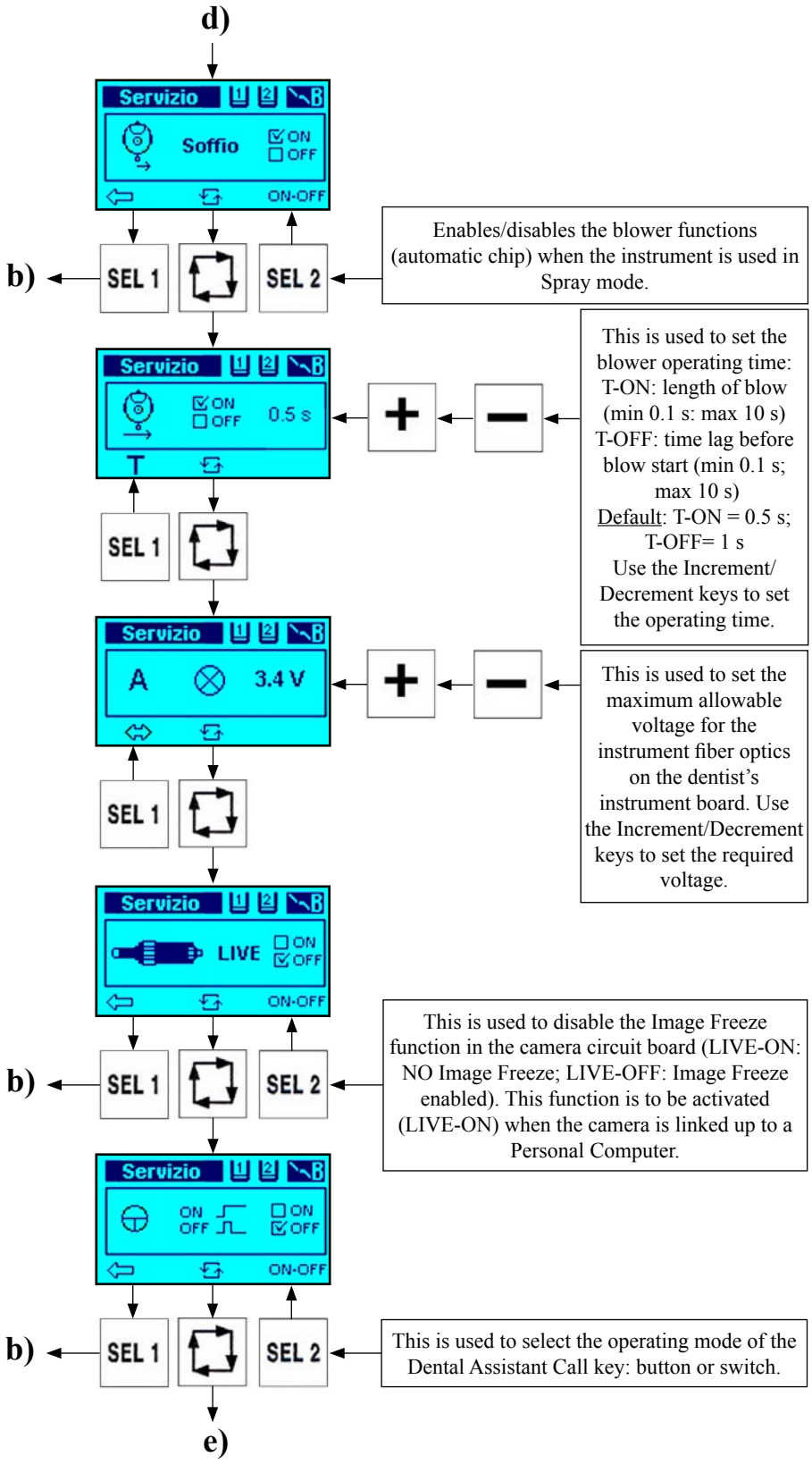
d)
Servizio
Soffio
ON
OFF
ON-OFF
b)
SEL 1
SEL 2
Enables/disables the blower functions (automatic chip) when the instrument is used in Spray mode.
Servizio
ON
OFF
0.5 s
T
SEL 1
This is used to set the blower operating time: T-ON: length of blow (min 0.1 s: max 10 s) T-OFF: time lag before blow start (min 0.1 s; max 10 s) Default: T-ON = 0.5 s; T-OFF= 1 s Use the Increment/ Decrement keys to set the operating time.
Servizio
A
3.4 V
SEL 1
This is used to set the maximum allowable voltage for the instrument fiber optics on the dentist's instrument board. Use the Increment/Decrement keys to set the required voltage.
Servizio
LIVE
ON
OFF
ON-OFF
b)
SEL 1
SEL 2
This is used to disable the Image Freeze function in the camera circuit board (LIVE-ON: NO Image Freeze; LIVE-OFF: Image Freeze enabled). This function is to be activated (LIVE-ON) when the camera is linked up to a Personal Computer.
Servizio
ON
OFF
ON
OFF
ON-OFF
b)
SEL 1
SEL 2
This is used to select the operating mode of the Dental Assistant Call key: button or switch.
e)

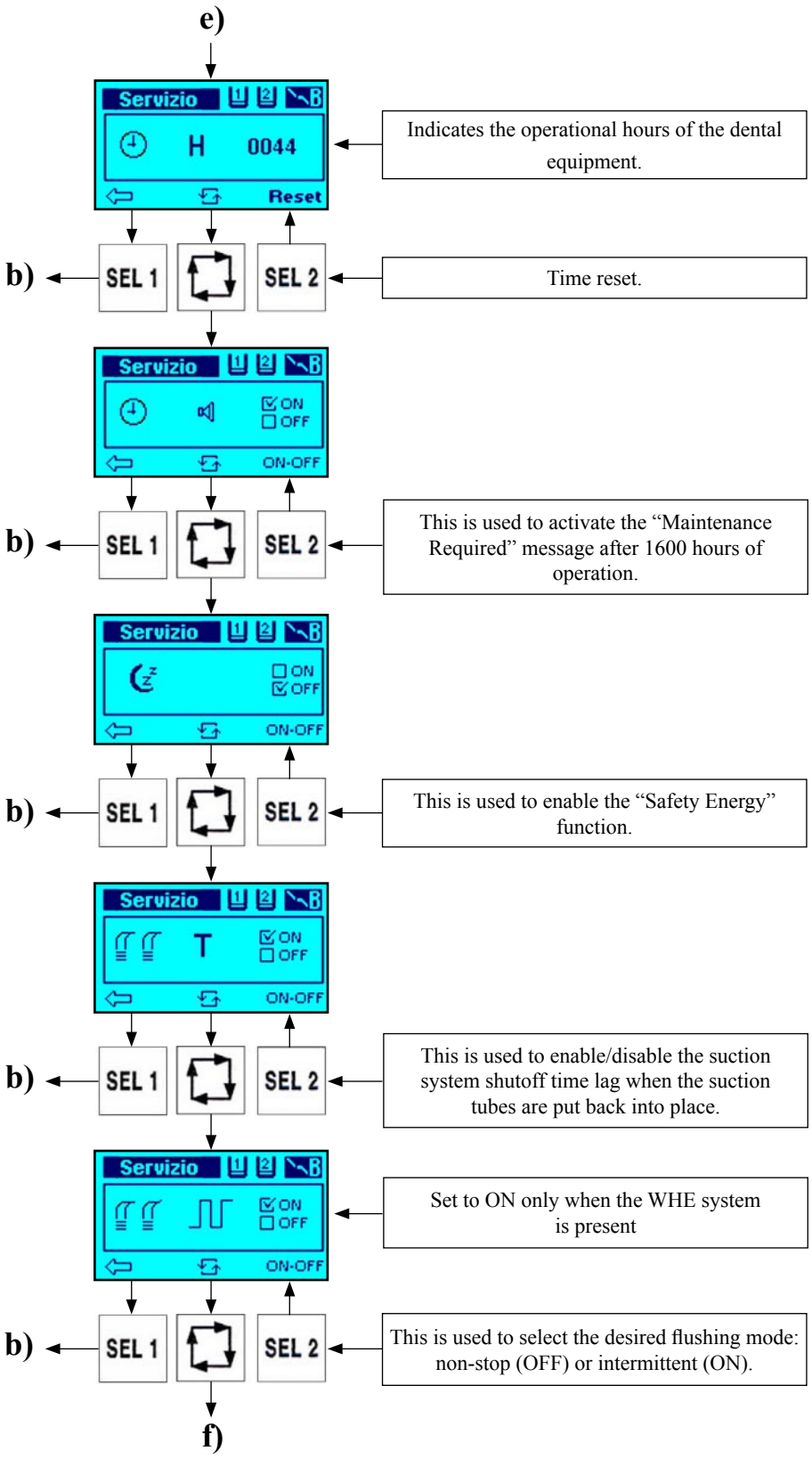
e)
Servizio
H 0044
Reset
Indicates the operational hours of the dental equipment.
b)
SEL 1
SEL 2
Time reset.
Servizio
ON
OFF
ON-OFF
b)
SEL 1
SEL 2
This is used to activate the "Maintenance Required" message after 1600 hours of operation.
Servizio
ON
OFF
ON-OFF
b)
SEL 1
SEL 2
This is used to enable the "Safety Energy" function.
Servizio
T
ON
OFF
ON-OFF
b)
SEL 1
SEL 2
This is used to enable/disable the suction system shutoff time lag when the suction tubes are put back into place.
Servizio
ON
OFF
ON-OFF
Set to ON only when the WHE system is present
b)
SEL 1
SEL 2
This is used to select the desired flushing mode: non-stop (OFF) or intermittent (ON).
f)

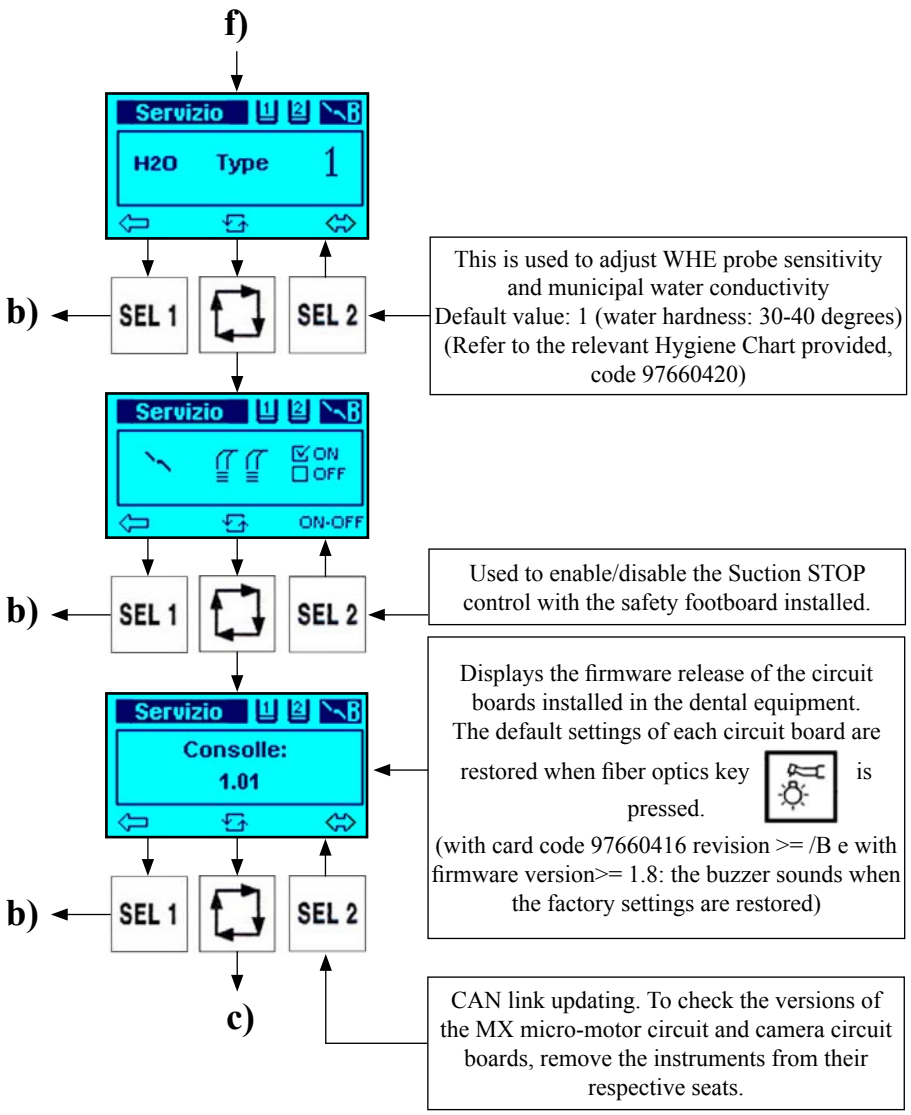
f)
Servizio
H2O Type 1
b)
SEL 1
SEL 2
This is used to adjust WHE probe sensitivity and municipal water conductivity
Default value: 1 (water hardness: 30-40 degrees)
(Refer to the relevant Hygiene Chart provided, code 97660420)
Servizio
ON
OFF
ON-OFF
b)
SEL 1
SEL 2
Used to enable/disable the Suction STOP control with the safety footboard installed.
Servizio
Consolle:
1.01
Displays the firmware release of the circuit boards installed in the dental equipment.
The default settings of each circuit board are restored when fiber optics key is pressed.
(with card code 97660416 revision >= /B e with firmware version>= 1.8: the buzzer sounds when the factory settings are restored)
b)
SEL 1
SEL 2
c)
CAN link updating. To check the versions of the MX micro-motor circuit and camera circuit boards, remove the instruments from their respective seats.